HEAT PUMPS

Nu-Heat
UNDERFLOOR & RENEWABLES

Information sheet

NIBE air source heat pumps from Nu-Heat

Heat pumps designed to supply the home with inexpensive and environmentally friendly heating and cooling.

PRODUCT 5 YEAR WARRANTY

NIBE ASHP range

Nu-Heat supplies the NIBE F2040-8, 12 and 16 air source heat pump range for residential use. The range can cover building heating power demand from 5–16kW and has been developed to make installation as smooth as possible.

Two units can be linked to produce a maximum of 25kW in domestic properties.

F2040 FEATURES

Heat pumps supplied by Nu-Heat meet all relevant UK and European standards and are MCS Approved.

- ✓ Outdoor unit with compact dimensions
- ✓ Two units can be linked for larger domestic properties
- ✓ MCS approved for RHI applications
- ✓ Quiet operation
- ✓ NIBE Uplink offers remote monitoring and adjustment of the system (a modem will be needed)
- ✓ Three sizes of air source heat pump: F2040-8 and F2040-12, (single fan), F2040-16 (twin fan)
- ✓ 5-year warranty as standard*
- ✓ CoP of up to 4.5 at 7/35˚C** (12kW model)
- ✓ Well insulated for improved energy efficiency

* For more information on warranty terms and conditions please visit: www.nu-heat.co.uk/nibe-tandc ** In accordance with EN 14511.

Control Modules

Control modules operate both heating and domestic hot water and feature a multicolour display showing user instructions, clear information about status, operating time and all temperatures. Modules are compatible with NIBE Uplink™.

The SMO20 and SMO40 control modules are rated as Class III under EU Commission Delegated Regulation No. 811/2013 when used as part of a heating package supplied by Nu-Heat. Class III = +1.5%.

SMO20: Supplied with single heat pump systems, the SMO20 is a standard control module that enables flexible operation.

SMO40: The advanced SMO40 is supplied with dual heat pump systems for domestic properties and can control up to eight heat pumps in commercial projects.

Internet control with NIBE Uplink™ – freedom; anytime, anywhere

NIBE Uplink™ allows access to a quick overview and/or more detailed information on the present status of your heat pump operation via the Internet.

The heating and domestic hot water system can be monitored and controlled remotely for perfect comfort. If the heat pump's operation is interrupted an alert is issued via e-mail allowing you to react quickly.

Typical system schematic

1. NIBE 2040 air source heat pump
2. SMO20 controller
3. EnergyMasterHP cylinder
4. Buffer tank
5. Domestic hot water out
6. Balanced cold out
7. Mains cold in
8. Heating flow and return

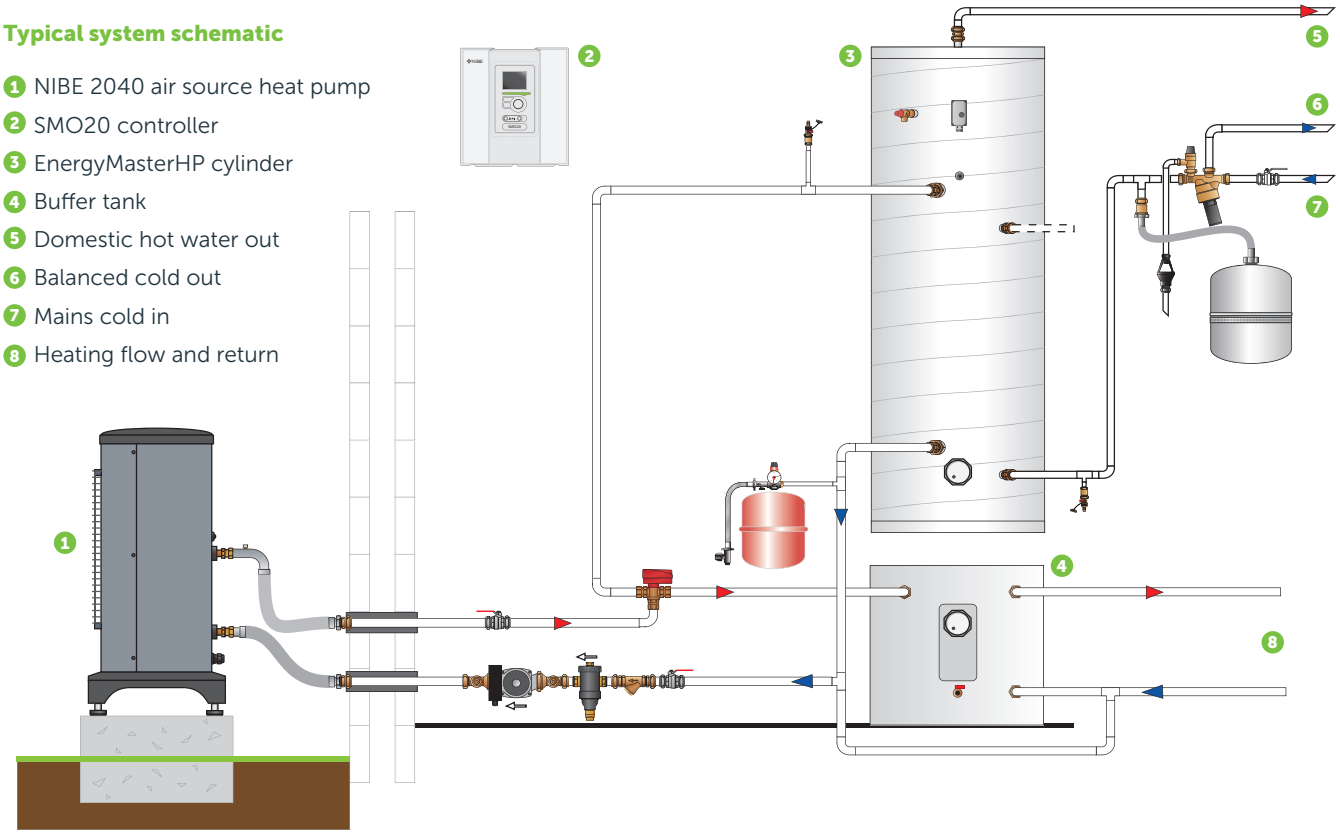

Which unit will I need?

Factors such as the size of the property, location and domestic hot water demand will be used by Nu-Heat to determine the size of heat pump unit that is appropriate for each individual project.

Technical specification

Model	F2040-8	F2040-12	F2040-16
CoP at 7/35˚C*	4.3	4.5	4.53
Power output at 7/35˚C (kW)	9.2	12.5	16.9
Operating voltage	230V 50Hz		
Max. outgoing heating medium temp.	58˚C		
Refrigerant quantity (R410A) (kg)	2.55	2.90	4.00
Height with stand (mm)	945	1045	1500
Width (mm)	1035	1145	1145
Depth (mm)	422	452	452
Weight (kg)	90	105	135
Sound pressure level at 2m free standing* (dB(A))	40	43	47
Sound pressure level at 6m free standing* (dB(A))	30.5	33.5	37.5
Sound pressure level at 10m free standing* (dB(A))	26	29	33
Max sound power level Lw(A)***	54	57	61

* In accordance with EN 14511 for heat source entry at 7˚C / hot water flow at 35˚C.
** Free space
*** In accordance with EN-12102

Positioning the unit

NIBE air source heat pumps can be installed on almost any kind of terrain and are supplied in a range of sizes to suit small, medium or large homes and even light commercial buildings.

- Place F2040 outdoors on a solid level base, preferably a concrete foundation; do not place it directly on a lawn or other non-solid surface. If used, concrete slabs must rest on tarmac or gravel.
- The foundation should be positioned so that the lower edge of the evaporator is at a minimum of 300mm above ground level. Areas that are prone to standing water or heavy snow should take this into consideration when selecting the appropriate height above ground level.
- Condensation water should be directed to a drain or similar.

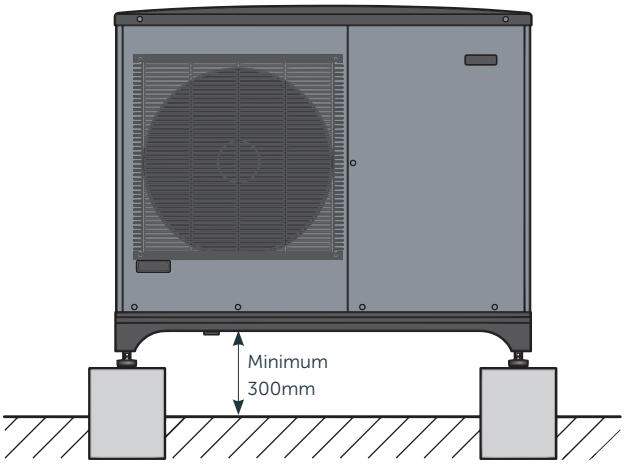

- The F2040 should not be positioned next to a habitable room or to inconvenience neighbours.
- The F2040 must not be placed so that recirculation of outdoor air can occur, as this causes lower output and impaired efficiency, see below.

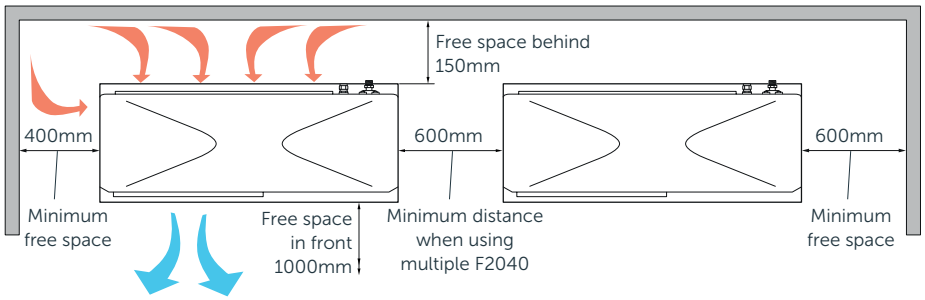

Distance from the property

For a heat pump using 32mm (DN25) insulated plastic pipe connections between the heat pump and property the maximum distance permitted is shown below. This will be checked at the design stage. If your project falls outside these criteria please speak to your Project Engineer.

Heat Pump	Max Distance
F2040-8	99m
F2040-12	79m
F2040-16	23m

For full details please refer to the NIBE F2040 Installation Manual available at www.nibe.co.uk**.**

Energy efficiency fiche

Supplier's name	NIBE					
Model	F2040-8		F2040-12		F2040-16	
Temperature application (˚C)	35	55	35	55	35	55
Seasonal space heating energy efficiency class, average climate	A++	A++	A++	A++	A++	A++
Rated heat output, average climate (kW)	8.2	7.0	11.5	10.0	14.5	14
Annual energy consumption for space heating, average climate (kWh)	3882	4447	5382	6136	6702	8431
Seasonal space heating energy efficiency, average climate (%)	172	127	174	132	176	134
Sound power level LWA indoors (dB)	35		35		35	
Rated heat output, cold climate (kW)	9.0	10.0	11.5	13.0	15.0	16.0
Rated heat output, warm climate (kW)	8.0	8.0	12.0	12.0	15.0	15.0
Annual energy consumption for space heating, cold climate (kWh)	6264	8844	7798	11197	10040	13629
Annual energy consumption for space heating, warm climate (kWh)	1879	2333	2759	3419	3370	4183
Seasonal space heating energy efficiency, cold climate (%)	139	108	142	111	144	113
Seasonal space heating energy efficiency, warm climate (%)	225	180	229	185	235	189
Sound power level LWA outdoors (dB)	54		57		61	